Разъёмы M12 для СКЭ2 — 4 и 8 контактов

Схемы контактов, габариты и чертежи производителя

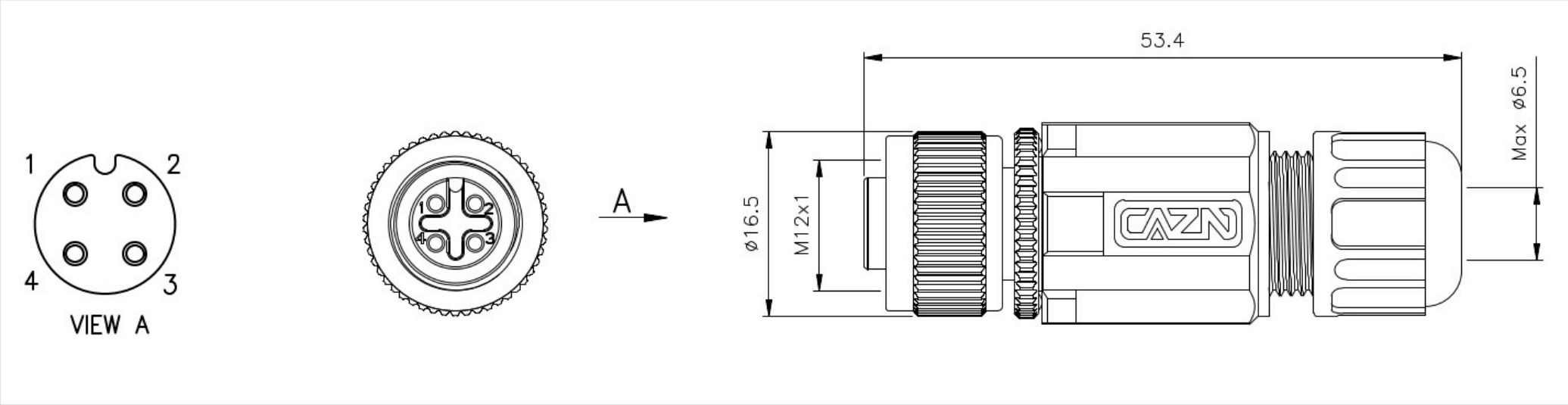

Разъём M12, 4 контакта — схема контактов и габариты

Rev.	Change Description	ECN #	Date

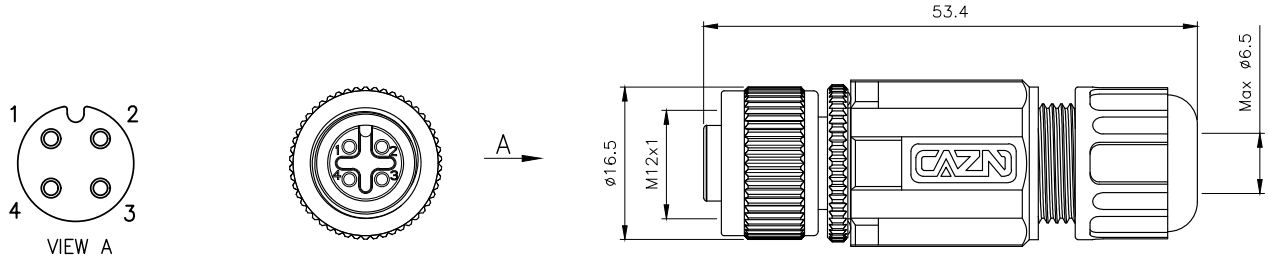

Technical specifications:		Materials:	
Coupling:	Threaded coupling	Shell material:	Brass nickel plated
Termination:	Soldering	Contact material:	Phosphor Copper Gold plated
Coding:	A	Insert material:	PA66+GF UL94 black
Pollution degree:	3	Sealing:	NBR
Temperature range:	−40°C ~ +80°C		
Degree of protection:	IP67		
Mating cycles:	⩾500		
Rated voltage:	250V AC/DC		
Rated current:	4A		
Contact resistance:	≤5 mΩ		
Insulation resistance:	⩾100 MΩ		
All materials are RoHS compliant			

GENERAL TOLERANCE (UNLESS SPECIFIED) ≤10 ±0.1 ＜10~≤20 ±0.2 ＜20~≤50 ±0.5 Angle ±1°	DWN W.M	DATE 2022.8.23	STA·思大
	CHK	DATE	
	APVD	DATE	TITLE M12 Straight Female Plastic Plug 4 Core
THIRD ANGLE	UNIT MM	REV A	PART NO 120021−04A000000
	SIZE A4	SHEET 1 OF 1	DRAWING NO M12P−A−S4

Разъём M12P-A-S4-Y — чертёж производителя

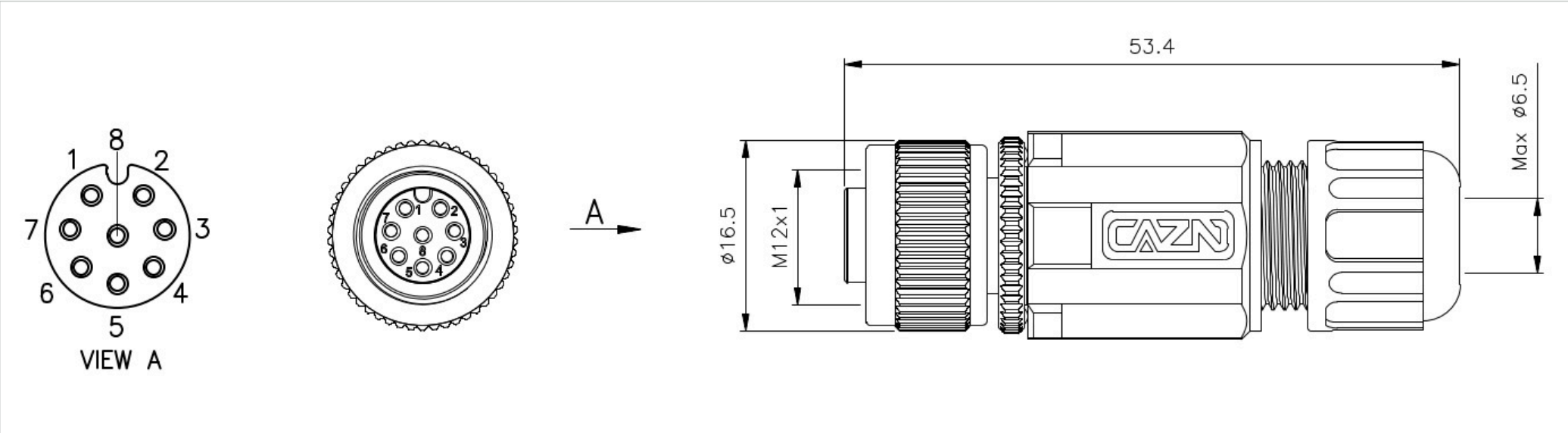

Разъём M12, 8 контактов — схема контактов и габариты

Rev.	Change Description	ECN #	Date

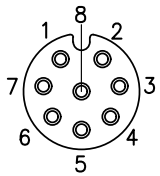

VIEW A

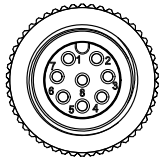

A

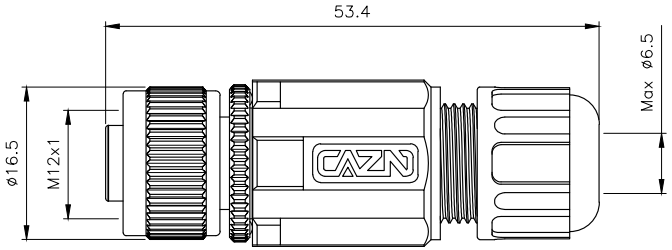

Technical specifications:		Materials:	
Coupling:	Threaded coupling	Shell material:	Brass nickel plated
Termination:	Soldering	Contact material:	Phosphor Copper Gold plated
Coding:	A	Insert material:	PA66+GF UL94 black
Pollution degree:	3	Sealing:	NBR
Temperature range:	−40°C ~ +80°C		
Degree of protection:	IP67		
Mating cycles:	⩾500		
Rated voltage:	30V AC/DC		
Rated current:	2A		
Contact resistance:	≤5 mΩ		
Insulation resistance:	⩾100 MΩ		
All materials are RoHS compliant			

GENERAL TOLERANCE (UNLESS SPECIFIED) ≤10 ±0.1 ＜10~≤20 ±0.2 ＜20~≤50 ±0.5 Angle ±1°	DWN W.M	DATE 2022.8.23	STA·思大
	CHK	DATE	
	APVD	DATE	TITLE M12 Straight Female Plastic Plug 8 Core
THIRD ANGLE	UNIT MM	REV A	PART NO 120021−08A000000
	SIZE A4	SHEET 1 OF 1	DRAWING NO M12P−A−S8

Разъём M12P-A-S8-Y — чертёж производителя